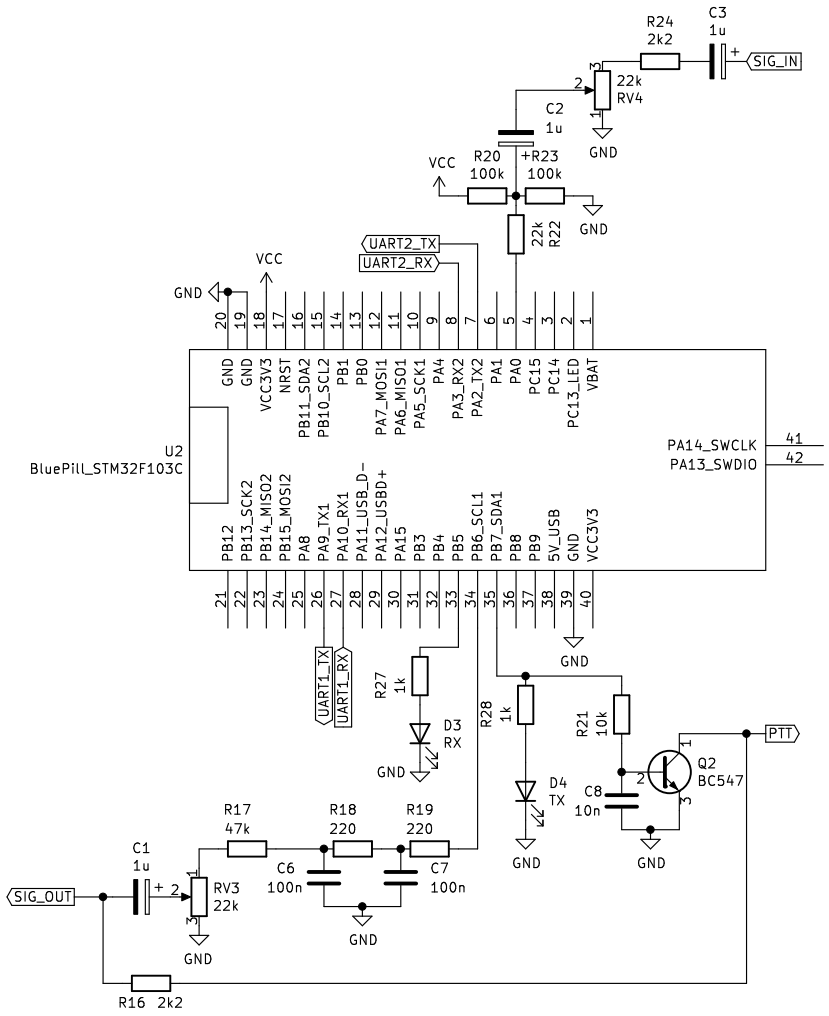

Piotr Wilkon SQ8L

Sheet: /
File: bpd.sch

Title: VP-Digi

Size: A4	Date: 2023-08-31	**Rev: 2.0**
KiCad E.D.A. kicad (5.1.9)-1		Id: 1/1