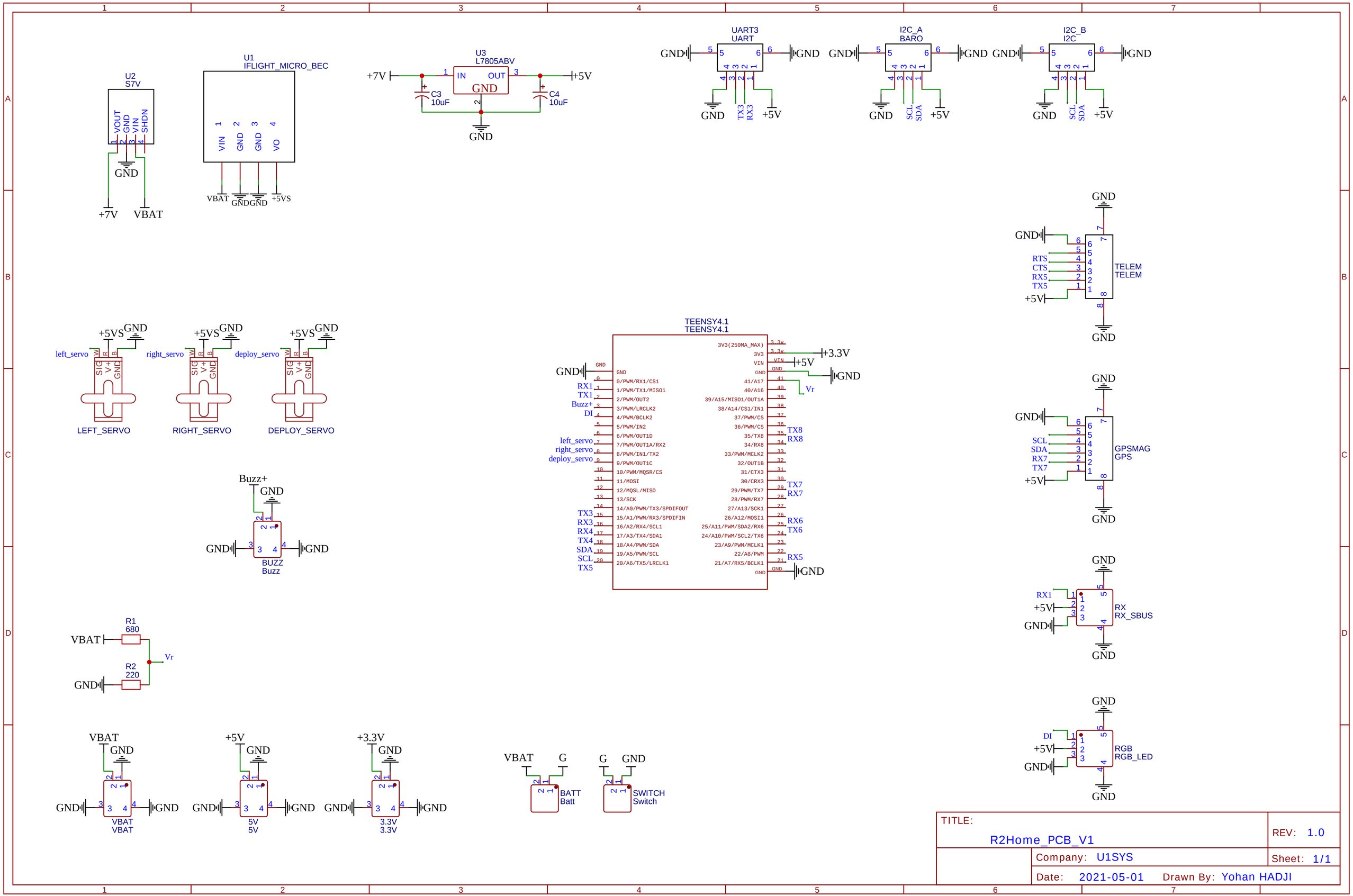

TITLE: R2Home_PCB_V1	REV: 1.0
Company: U1SYS	Sheet: 1/1
Date: 2021-05-01 Drawn By: Yohan HADJI	