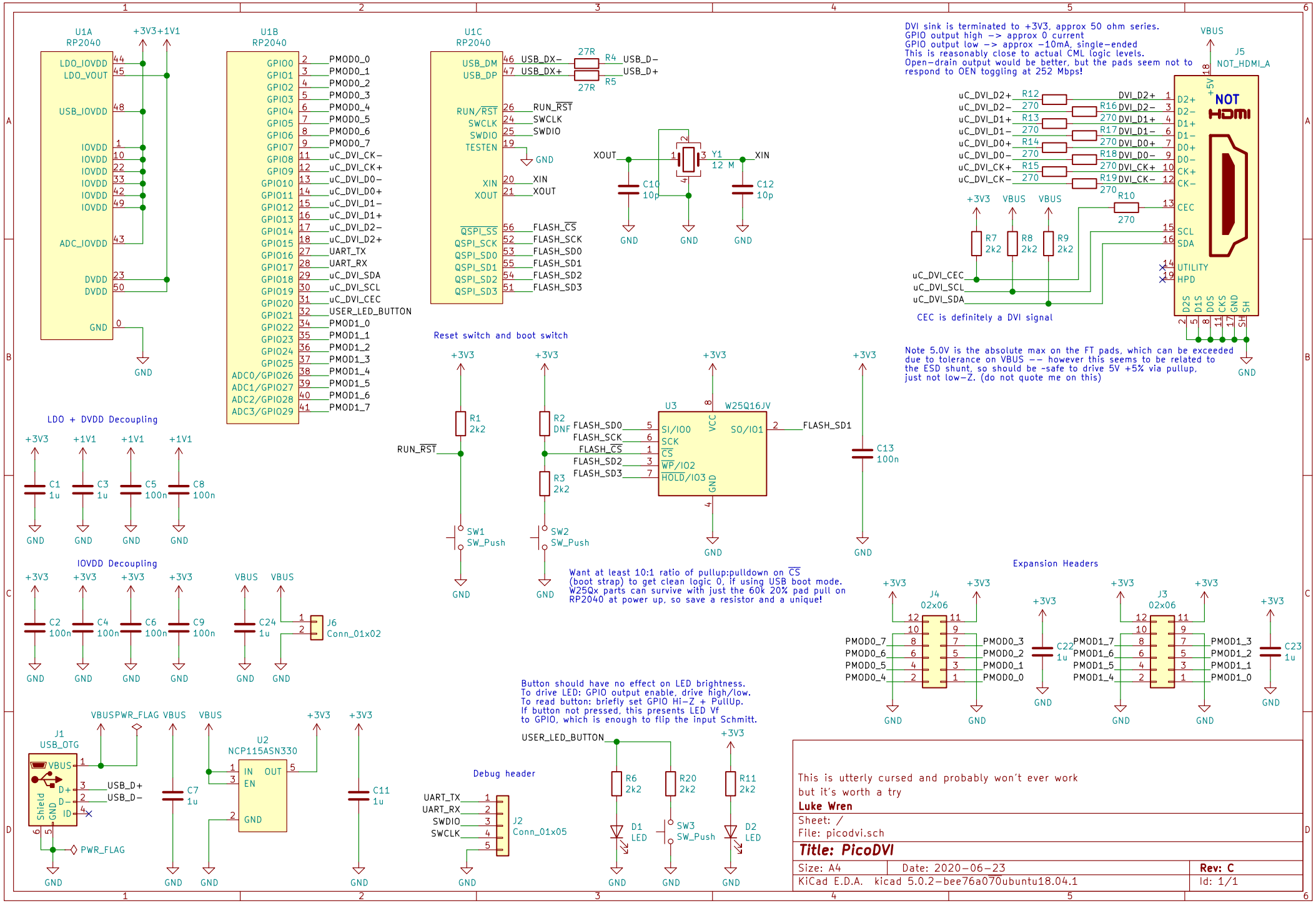
U1A
RP2040
LDO_IOVDD
LDO_VOUT
USB_IOVDD
IOVDD
ADC_IOVDD
DVDD
GND
+3V3
+1V1
U1B
RP2040
GPIO0 PMOD0_0
GPIO1 PMOD0_1
GPIO2 PMOD0_2
GPIO3 PMOD0_3
GPIO4 PMOD0_4
GPIO5 PMOD0_5
GPIO6 PMOD0_6
GPIO7 PMOD0_7
GPIO8 uC_DVI_CK−
GPIO9 uC_DVI_CK+
GPIO10 uC_DVI_D0−
GPIO11 uC_DVI_D0+
GPIO12 uC_DVI_D1−
GPIO13 uC_DVI_D1+
GPIO14 uC_DVI_D2−
GPIO15 uC_DVI_D2+
GPIO16 UART_TX
GPIO17 UART_RX
GPIO18 uC_DVI_SDA
GPIO19 uC_DVI_SCL
GPIO20 uC_DVI_CEC
GPIO21 USER_LED_BUTTON
GPIO22 PMOD1_0
GPIO23 PMOD1_1
GPIO24 PMOD1_2
GPIO25 PMOD1_3
ADC0/GPIO26 PMOD1_4
ADC1/GPIO27 PMOD1_5
ADC2/GPIO28 PMOD1_6
ADC3/GPIO29 PMOD1_7
U1C
RP2040
USB_DM USB_DX−
USB_DP USB_DX+
RUN/RST RUN_RST
SWCLK SWCLK
SWDIO SWDIO
TESTEN
XIN XIN
XOUT XOUT
QSPI_SS FLASH_CS
QSPI_SCK FLASH_SCK
QSPI_SD0 FLASH_SD0
QSPI_SD1 FLASH_SD1
QSPI_SD2 FLASH_SD2
QSPI_SD3 FLASH_SD3
R4 27R USB_D−
R5 27R USB_D+
Y1 12 M
C10 10p
C12 10p
DVI sink is terminated to +3V3, approx 50 ohm series.
GPIO output high −> approx 0 current
GPIO output low −> approx −10mA, single−ended
This is reasonably close to actual CML logic levels.
Open−drain output would be better, but the pads seem not to respond to OEN toggling at 252 Mbps!
VBUS
J5
NOT_HDMI_A
NOT HDMI
uC_DVI_D2+ R12 DVI_D2+
uC_DVI_D2− 270 R16 270 DVI_D2−
uC_DVI_D1+ R13 DVI_D1+
uC_DVI_D1− 270 R17 270 DVI_D1−
uC_DVI_D0+ R14 DVI_D0+
uC_DVI_D0− 270 R18 270 DVI_D0−
uC_DVI_CK+ R15 DVI_CK+
uC_DVI_CK− 270 R19 270 DVI_CK−
R10 270
R7 2k2
R8 2k2
R9 2k2
uC_DVI_CEC
uC_DVI_SCL
uC_DVI_SDA
CEC is definitely a DVI signal
Note 5.0V is the absolute max on the FT pads, which can be exceeded due to tolerance on VBUS −− however this seems to be related to the ESD shunt, so should be ~safe to drive 5V +5% via pullup, just not low−Z. (do not quote me on this)
Reset switch and boot switch
R1 2k2
R2 DNF
R3 2k2
SW1 SW_Push
SW2 SW_Push
U3 W25Q16JV
SI/IO0 SCK CS WP/IO2 HOLD/IO3 SO/IO1 VCC GND
FLASH_SD0 FLASH_SCK FLASH_CS FLASH_SD2 FLASH_SD3 FLASH_SD1
C13 100n
Want at least 10:1 ratio of pullup:pulldown on CS (boot strap) to get clean logic 0, if using USB boot mode.
W25Qx parts can survive with just the 60k 20% pad pull on RP2040 at power up, so save a resistor and a unique!
LDO + DVDD Decoupling
C1 1u
C3 1u
C5 100n
C8 100n
IOVDD Decoupling
C2 100n
C4 100n
C6 100n
C9 100n
C24 1u
J6 Conn_01x02
Expansion Headers
J4 02x06
PMOD0_7 PMOD0_6 PMOD0_5 PMOD0_4 PMOD0_3 PMOD0_2 PMOD0_1 PMOD0_0
C22 1u
J3 02x06
PMOD1_7 PMOD1_6 PMOD1_5 PMOD1_4 PMOD1_3 PMOD1_2 PMOD1_1 PMOD1_0
C23 1u
J1 USB_OTG
VBUS D+ D− ID Shield GND
USB_D+ USB_D−
PWR_FLAG
C7 1u
U2 NCP115ASN330
IN OUT EN GND
C11 1u
Button should have no effect on LED brightness.
To drive LED: GPIO output enable, drive high/low.
To read button: briefly set GPIO Hi−Z + PullUp.
If button not pressed, this presents LED Vf to GPIO, which is enough to flip the input Schmitt.
USER_LED_BUTTON
Debug header
UART_TX UART_RX SWDIO SWCLK
J2 Conn_01x05
R6 2k2
R20 2k2
R11 2k2
D1 LED
SW3 SW_Push
D2 LED
This is utterly cursed and probably won't ever work but it's worth a try
Luke Wren
Sheet: /
File: picodvi.sch
Title: PicoDVI
Size: A4
Date: 2020−06−23
Rev: C
KiCad E.D.A. kicad 5.0.2−bee76a070ubuntu18.04.1
Id: 1/1