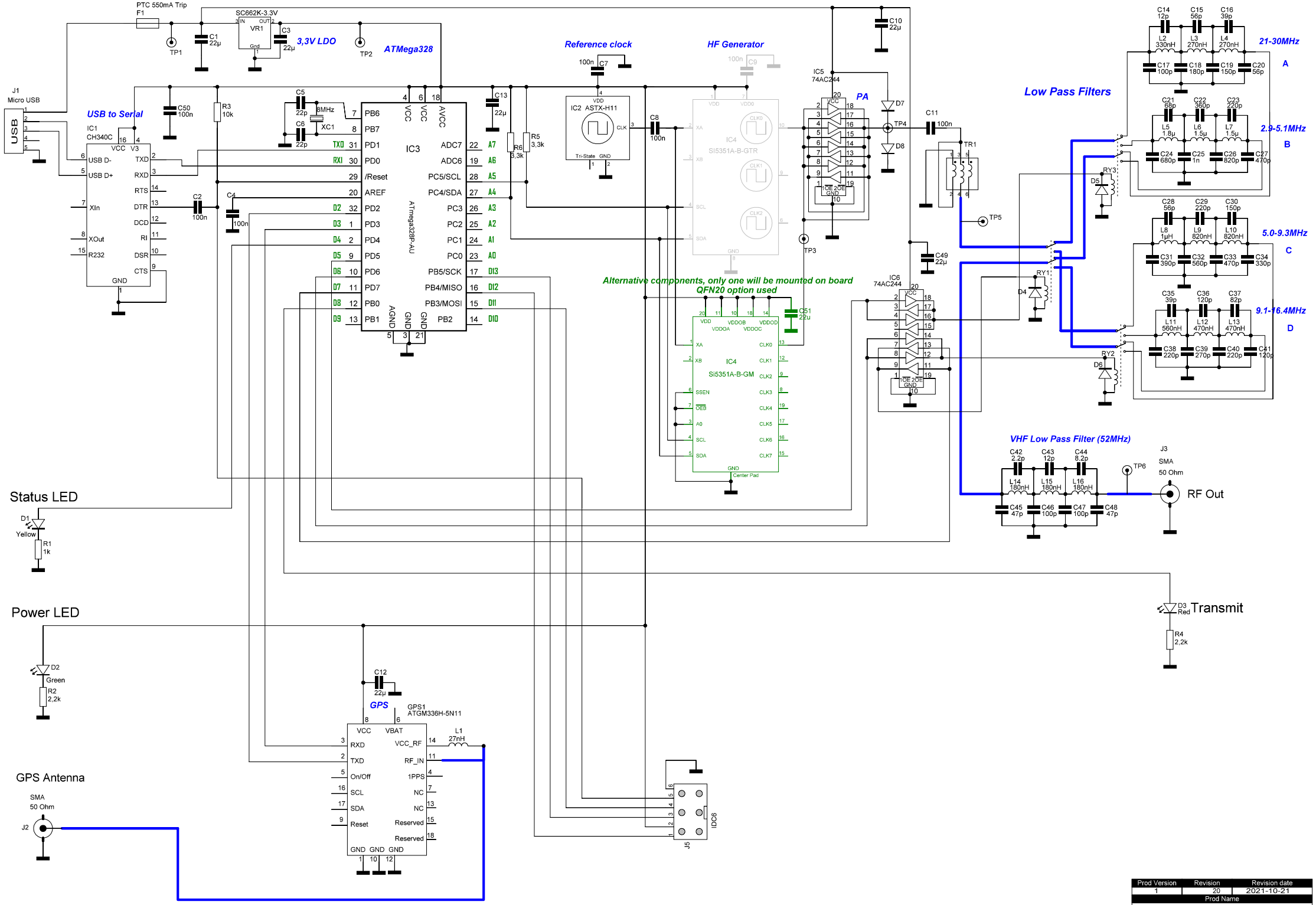
PTC 550mA Trip
F1
SC662K-3.3V
VR1
3,3V LDO
ATMega328
Reference clock
HF Generator
PA
Low Pass Filters
21-30MHz
2.9-5.1MHz
5.0-9.3MHz
9.1-16.4MHz
USB to Serial
IC1
CH340C
IC3
ATmega328P-AU
IC2 ASTX-H11
IC4
Si5351A-B-GTR
Si5351A-B-GM
IC5
74AC244
IC6
74AC244
Alternative components, only one will be mounted on board
QFN20 option used
VHF Low Pass Filter (52MHz)
J3
SMA
50 Ohm
RF Out
Status LED
Power LED
Transmit
GPS
GPS1
ATGM336H-5N11
GPS Antenna
J2
J5
IDC6
J1
Micro USB
USB
Prod Version
Revision
Revision date
1
20
2021-10-21
Prod Name
WSPR TX Desktop 80To10m