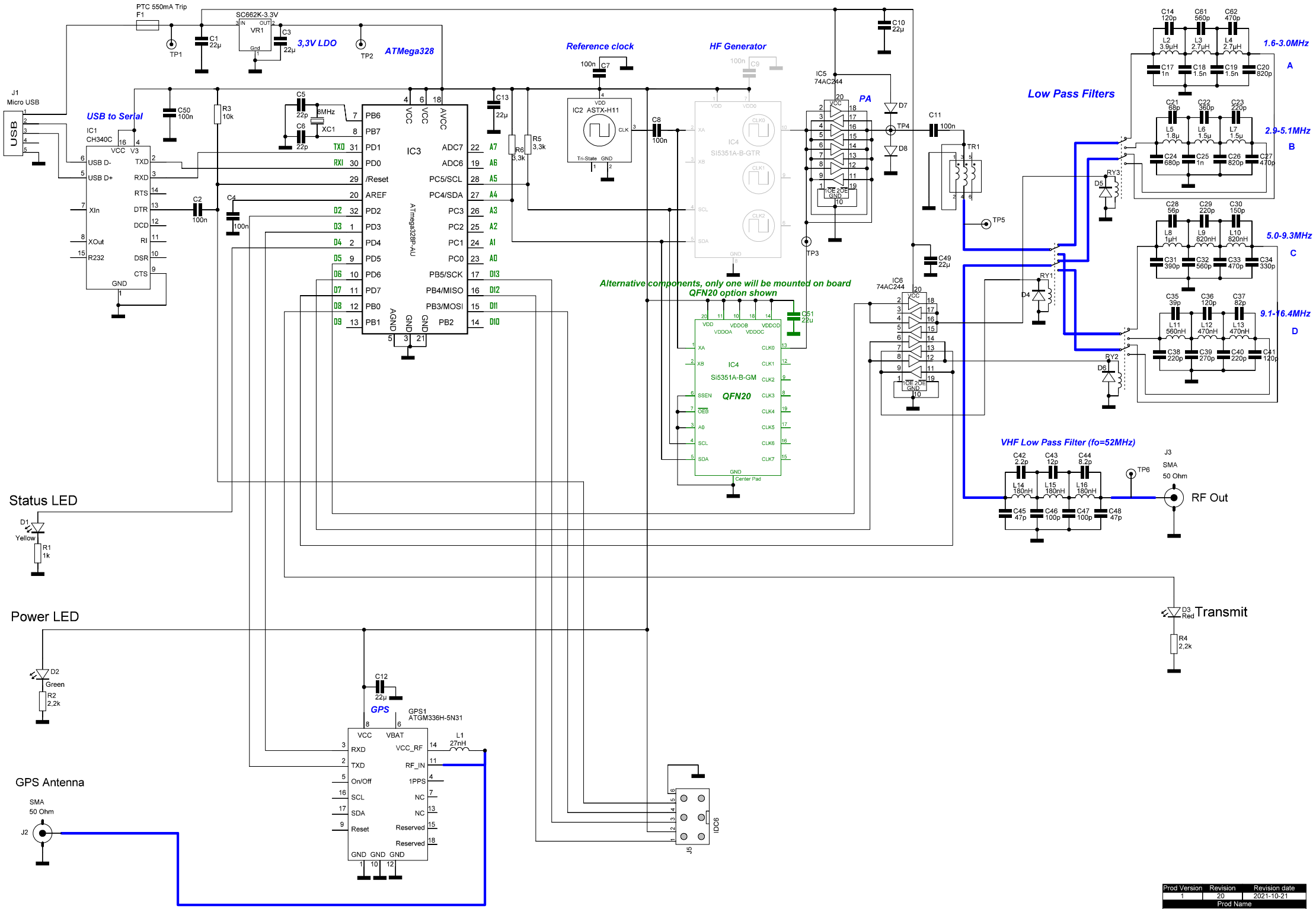

Prod Version	Revision	Revision date
1	20	2021-10-21
Prod Name		
Arduino WSPR TX Desktop MidPlus		