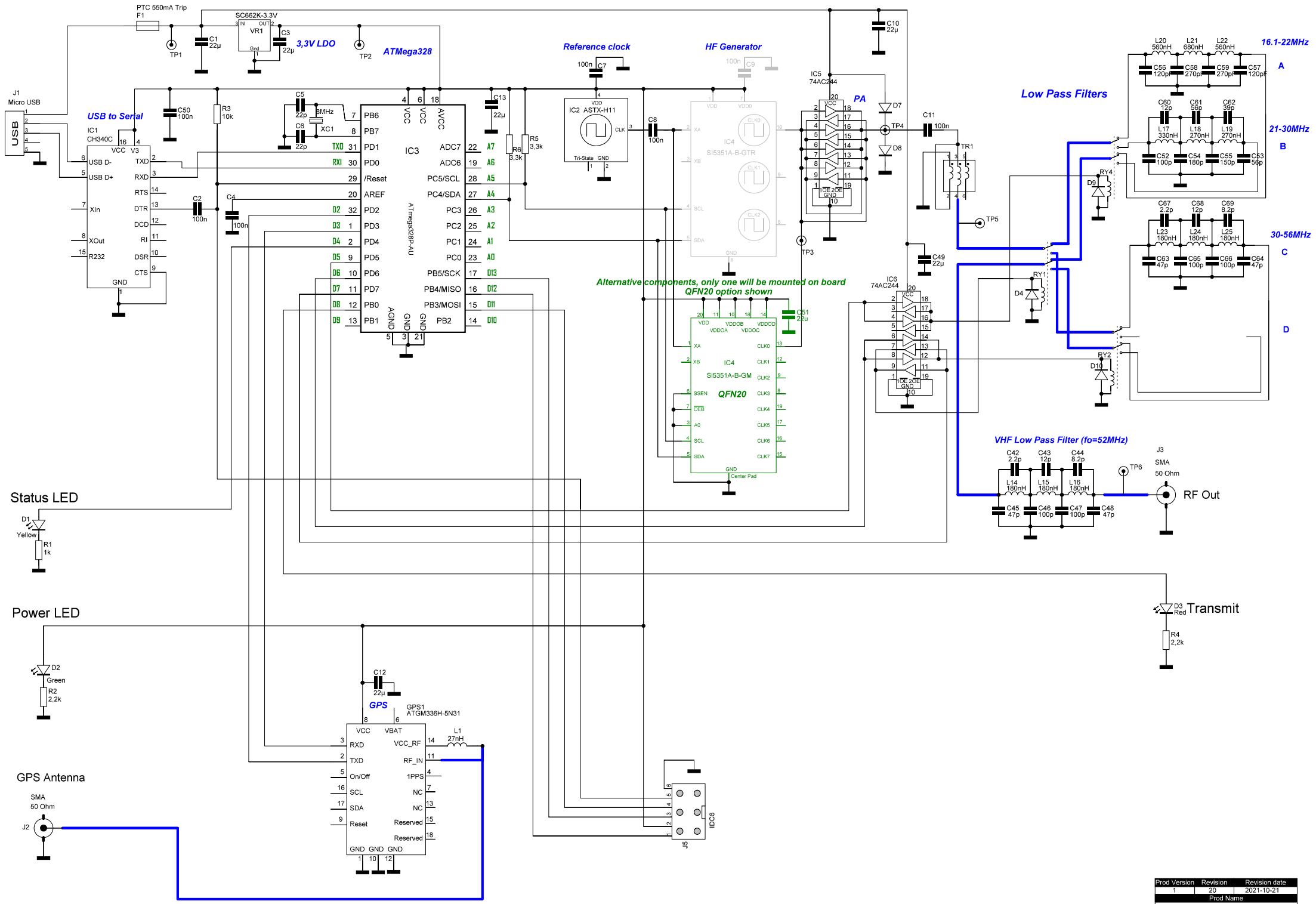
PTC 550mA Trip
F1
SC662K-3.3V
VR1
3,3V LDO
ATMega328
Reference clock
HF Generator
PA
Low Pass Filters
16.1-22MHz
21-30MHz
30-56MHz
A
B
C
D
J1
Micro USB
USB
USB to Serial
IC1
CH340C
IC3
ATmega328P-AU
IC2 ASTX-H11
IC4
Si5351A-B-GTR
Si5351A-B-GM
QFN20
Alternative components, only one will be mounted on board
QFN20 option shown
IC5
74AC244
IC6
74AC244
TR1
RY1
RY2
RY4
VHF Low Pass Filter (fo=52MHz)
J3
SMA
50 Ohm
RF Out
Status LED
D1
Yellow
R1
1k
Power LED
D2
Green
R2
2,2k
D3
Red
Transmit
R4
2,2k
GPS
GPS1
ATGM336H-5N31
L1
27nH
GPS Antenna
SMA
50 Ohm
J2
J5
IDC6
Prod Version
Revision
Revision date
1
20
2021-10-21
Prod Name
Arduino WSPR TX Desktop HighPlus