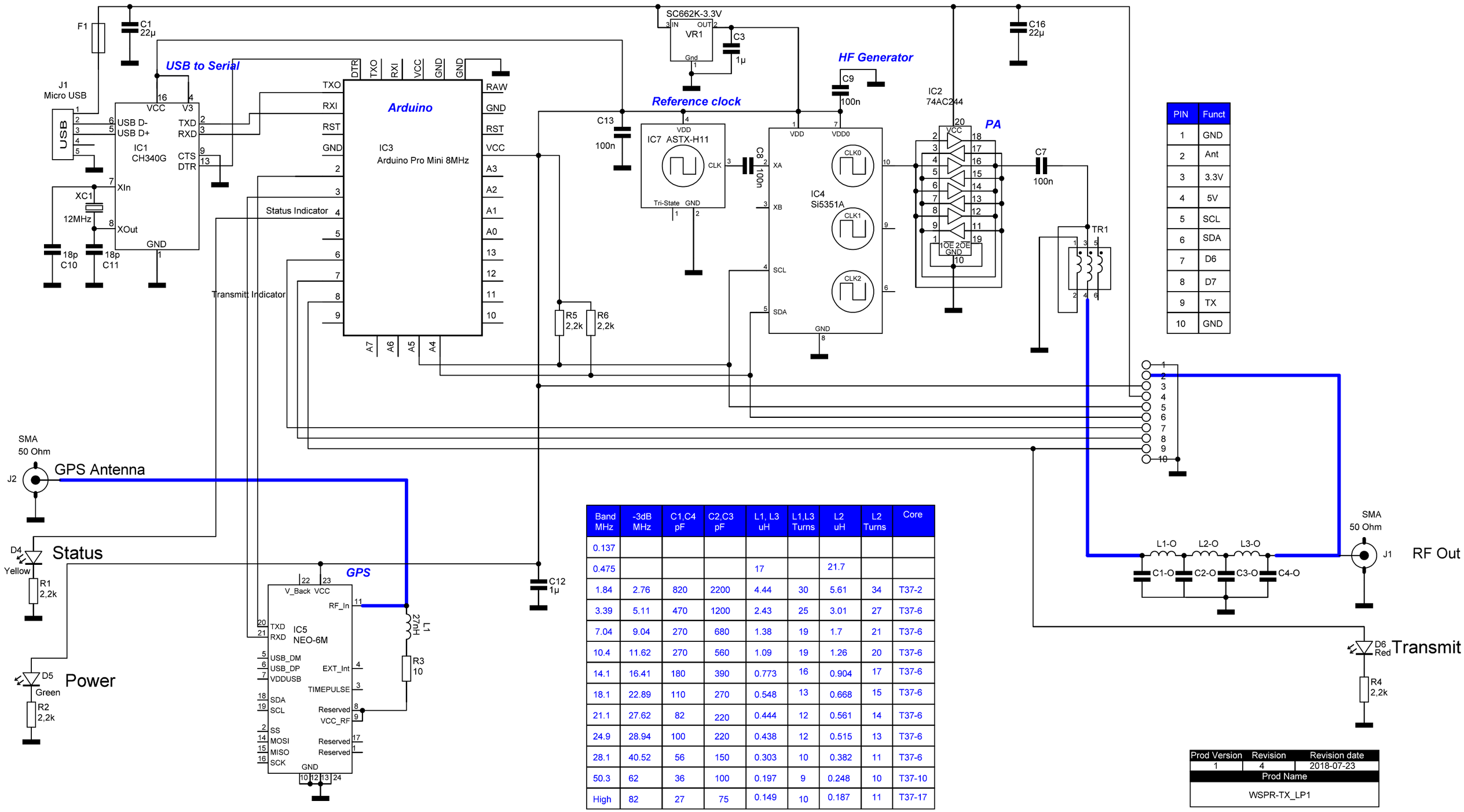

PIN	Funct
1	GND
2	Ant
3	3.3V
4	5V
5	SCL
6	SDA
7	D6
8	D7
9	TX
10	GND

Band MHz	-3dB MHz	C1,C4 pF	C2,C3 pF	L1, L3 uH	L1,L3 Turns	L2 uH	L2 Turns	Core
0.137								
0.475				17		21.7		
1.84	2.76	820	2200	4.44	30	5.61	34	T37-2
3.39	5.11	470	1200	2.43	25	3.01	27	T37-6
7.04	9.04	270	680	1.38	19	1.7	21	T37-6
10.4	11.62	270	560	1.09	19	1.26	20	T37-6
14.1	16.41	180	390	0.773	16	0.904	17	T37-6
18.1	22.89	110	270	0.548	13	0.668	15	T37-6
21.1	27.62	82	220	0.444	12	0.561	14	T37-6
24.9	28.94	100	220	0.438	12	0.515	13	T37-6
28.1	40.52	56	150	0.303	10	0.382	11	T37-6
50.3	62	36	100	0.197	9	0.248	10	T37-10
High	82	27	75	0.149	10	0.187	11	T37-17

http://www.gqrp.com/harmonic_filters.pdf

Prod Version	Revision	Revision date
1	4	2018-07-23
Prod Name		
WSPR-TX_LP1		