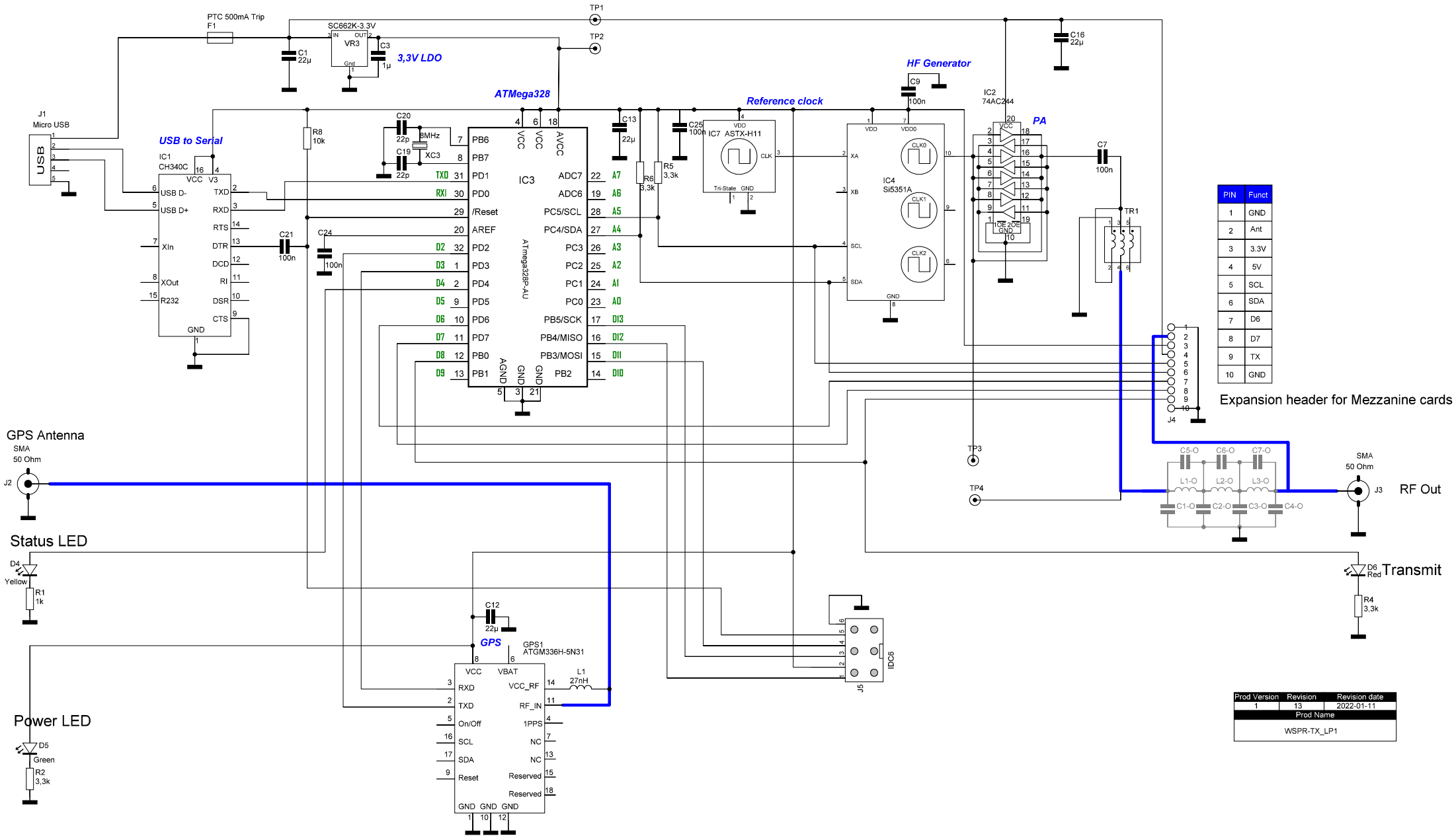
PTC 500mA Trip
F1
SC662K-3.3V
VR3
C1
22µ
C3
1µ
3,3V LDO
TP1
TP2
C16
22µ
HF Generator
C9
100n
IC2
74AC244
PA
C7
100n
TR1
J1
Micro USB
USB
USB to Serial
IC1
CH340C
USB D-
USB D+
XIn
XOut
R232
TXD
RXD
RTS
DTR
DCD
RI
DSR
CTS
GND
C21
100n
R8
10k
C24
100n
ATMega328
C20
22p
8MHz
XC3
C19
22p
IC3
ATmega328P-AU
PB6
PB7
PD1
PD0
/Reset
AREF
PD2
PD3
PD4
PD5
PD6
PD7
PB0
PB1
ADC7
ADC6
PC5/SCL
PC4/SDA
PC3
PC2
PC1
PC0
PB5/SCK
PB4/MISO
PB3/MOSI
PB2
AGND
GND
AVCC
VCC
C13
22µ
R6
3,3k
R5
3,3k
C25
100n
Reference clock
IC7 ASTX-H11
VDD
CLK
Tri-State
GND
IC4
Si5351A
XA
XB
SCL
SDA
CLK0
CLK1
CLK2
VDD0
OE
TP3
TP4
J4
Expansion header for Mezzanine cards
PIN | Funct
1 | GND
2 | Ant
3 | 3.3V
4 | 5V
5 | SCL
6 | SDA
7 | D6
8 | D7
9 | TX
10 | GND
GPS Antenna
SMA
50 Ohm
J2
C5-O
C6-O
C7-O
L1-O
L2-O
L3-O
C1-O
C2-O
C3-O
C4-O
SMA
50 Ohm
J3
RF Out
Status LED
D4
Yellow
R1
1k
D6
Red
Transmit
R4
3,3k
C12
22µ
GPS
GPS1
ATGM336H-5N31
VCC
VBAT
RXD
TXD
On/Off
SCL
SDA
Reset
VCC_RF
RF_IN
1PPS
NC
Reserved
L1
27nH
GND
IDC6
J5
Power LED
D5
Green
R2
3,3k
Prod Version | Revision | Revision date
1 | 13 | 2022-01-11
Prod Name
WSPR-TX_LP1