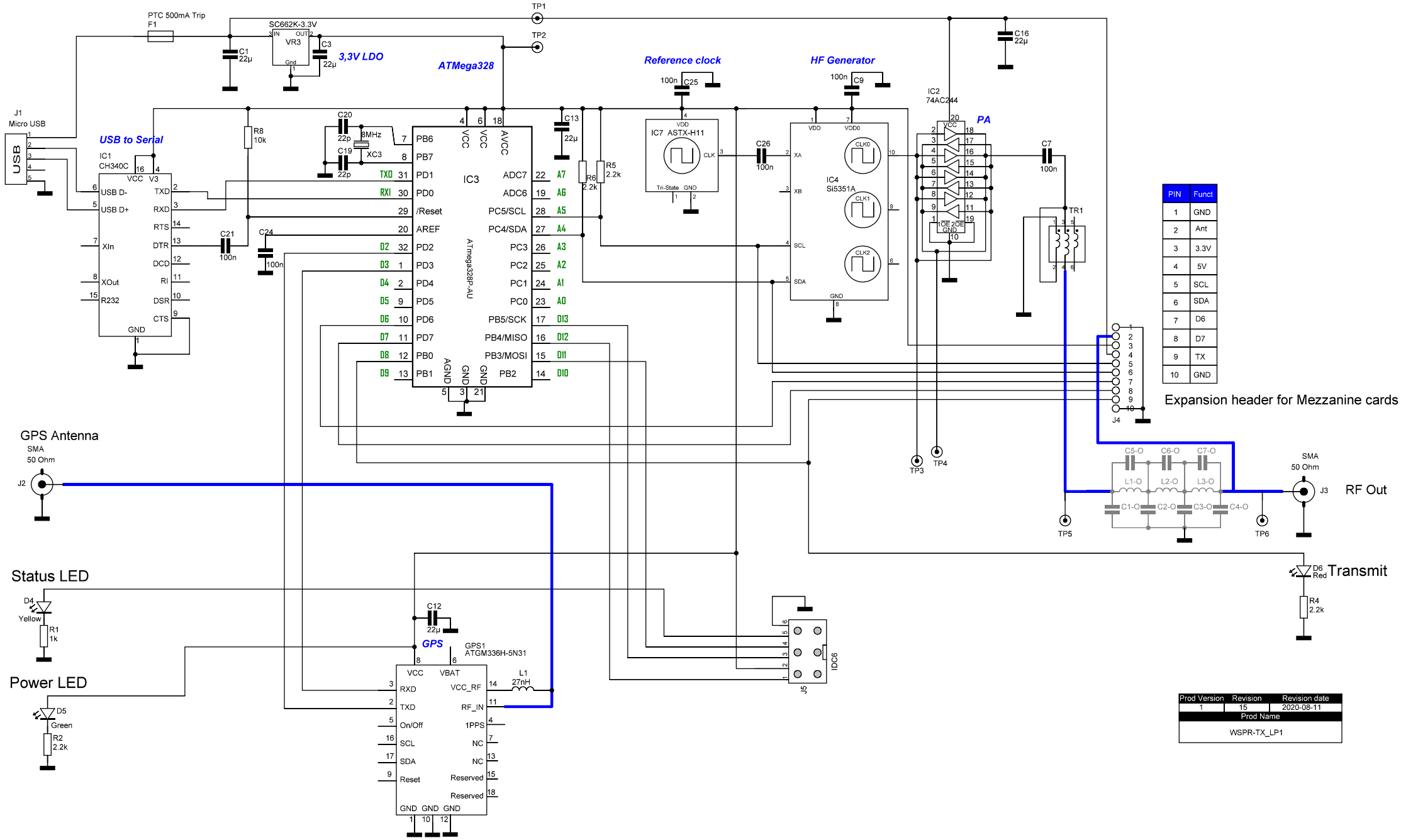

PIN	Funct
1	GND
2	Ant
3	3.3V
4	5V
5	SCL
6	SDA
7	D6
8	D7
9	TX
10	GND

Prod Version	Revision	Revision date
1	15	2020-08-11
Prod Name		
WSPR-TX_LP1		